THIS DRAWING IS UNPUBLISHED. RELEASED FOR PUBLICATION -.- .
© COPYRIGHT - By - ALL RIGHTS RESERVED.

LOC	DIST
EH	00

REVISIONS

P	LTR	DESCRIPTION	DATE	DWN	APVD
	K	REV ECO-13-020261	02JAN2014	GG	MK

FINISHED WIRE DATA		
CONDUCTORS	WIRE AWG	24 AWG SOLID
	MATERIAL	SOLID BARE COPPER 1
INSULATION	MATERIAL	HIGH DENSITY POLYETHYLENE 1
JACKET	MATERIAL	FR PVC 1

COLOR CODE

PAIR	COLOR CODE
1	WHT-BLU
2	WHT-ORG
3	WHT-GRN
4	WHT-BRN

1. MATERIALS ARE SELECTED BASED ON THEIR ABILITY TO CONFORM TO UL 444 LATEST ISSUE.
2. CABLE SHALL BE CAPABLE OF WITHSTANDING 1500 VRMS BETWEEN OUTER SURFACE AND CONDUCTORS.
3. DIMENSIONS ARE MAXIMUM UNLESS OTHERWISE SPECIFIED.
4. GOVERNING SPECIFICATIONS – LATEST REVISIONS
   NEC 800 (US)/CEC 60-322 (CANADA)
   UL 444 – CMH (CANADA) / CMUC (US)

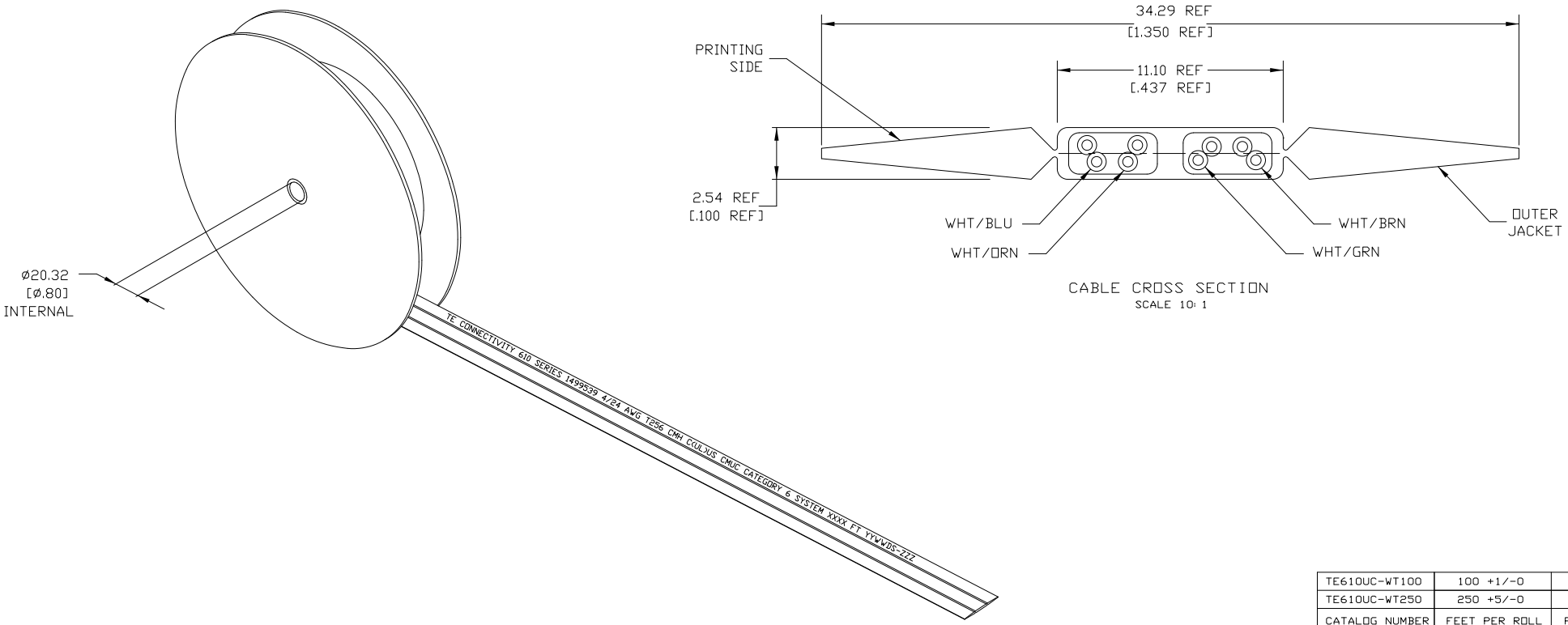

CATALOG NUMBER	FEET PER ROLL	PART NUMBER
TE610UC-WT100	100 +1/-0	1499539-5
TE610UC-WT250	250 +5/-0	1499539-1

THIS DRAWING IS A CONTROLLED DOCUMENT.

DIMENSIONS: mm [INCHES]

TOLERANCES UNLESS OTHERWISE SPECIFIED:
0 PLC ± –
1 PLC ± .1
2 PLC ± .02
3 PLC ± .005
4 PLC ± .0005
ANGLES ±

MATERIAL 1

FINISH

DWN L. HALL 18APR2007
CHK J. GENIAC 25APR2007
APVD J. GENIAC 25APR2007

PRODUCT SPEC IS 408-3194
APPLICATION SPEC 108-2374 501-691
WEIGHT

TE Connectivity

NAME CABLE, 4 UTP, 24AWG, CAT 6 SYSTEM, CMUC

SIZE	CAGE CODE	DRAWING NO	RESTRICTED TO
A1	00779	C-1499539	–

CUSTOMER DRAWING SCALE NTS SHEET 1 OF 1 REV K

4805 (3/11)